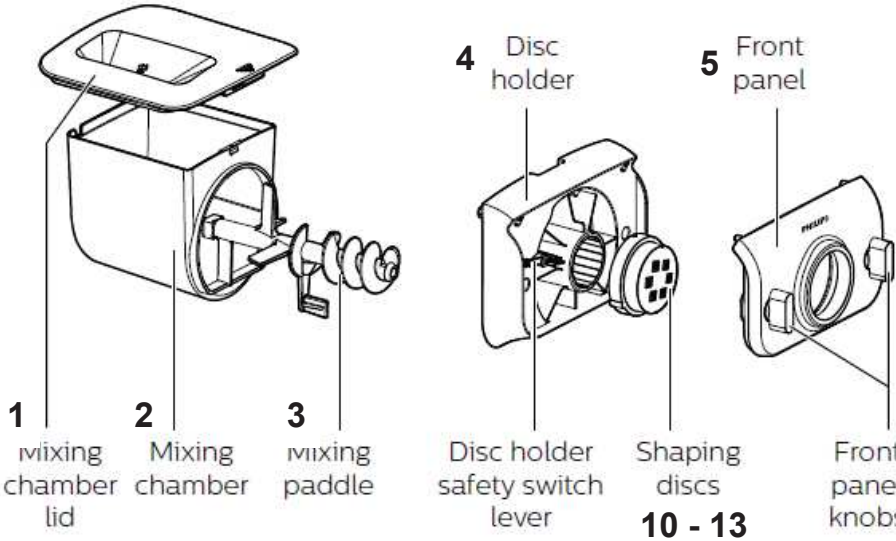
4 Disc holder
5 Front panel
1 Mixing chamber lid
2 Mixing chamber
3 Mixing paddle
Disc holder safety switch lever
Shaping discs
10 - 13
Front panel knobs

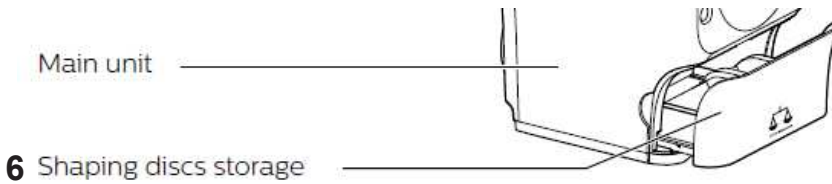
Main unit
6 Shaping discs storage

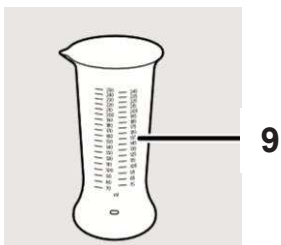
9

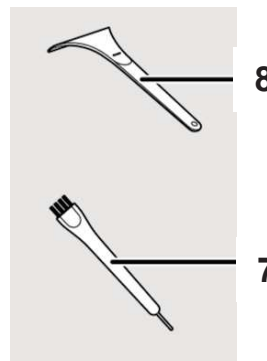
8
7

20

21

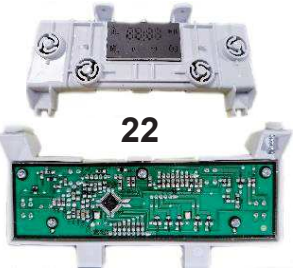

22

23

24

25

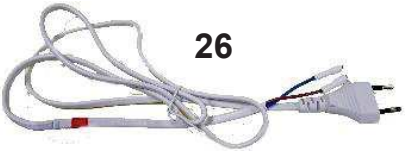

26